STRUCTURAL PRESTRESSED INDUSTRIES, INC.

11405 NW 112 CT (138th Street), Medley, Florida 33178
TEL (305) 556-6699 FAX (305) 556-9696 *www.spimiami.com*

FOR SPANS AND LOADS NOT SHOWN IN TABLES AND FOR FIRE RATING CONTACT SPI.

CAMBER IS INHERENT TO PRESTRESSED MEMBERS. HEAVY LOADING AND LONG SPANS MAY RESULT IN HIGHER CAMBERS. CONTACT SPI WITH ANY CAMBER CONCERNS.

12" WEB PRESTRESSED L BEAM

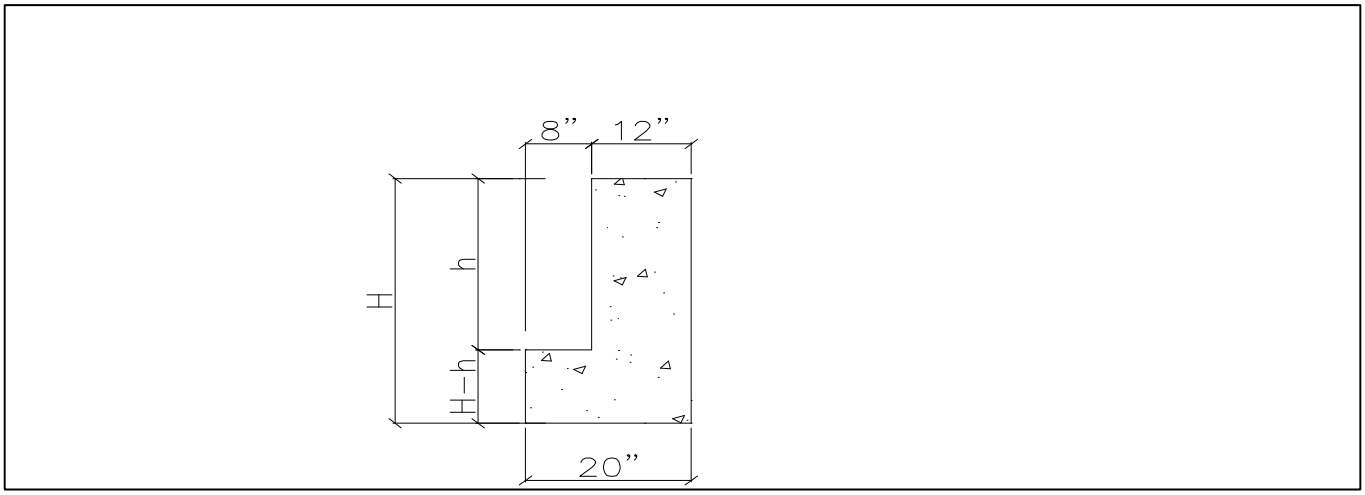

Description	Area (in)	I (in^4)	Sb (in^3)	Yb (in)	Weight (plf)
12" Web 20" Bottom 28" Height 12" Ledge	432	27260	2198	12.4	450
12" Web 20" Bottom 36" Height 12" Ledge	528	57760	3596	16.1	550
12" Web 20" Bottom 38" Height 12" Ledge	552	67822	3991	17.0	575

Service Loads in (klf)

Depth (in)		Span (ft)																		
H	h	21	23	25	27	29	31	33	35	37	39	41	43	45	47	49	50			
28	16	7.0	5.8	4.8	4.0	3.6	3.1	2.7	2.3	2.0	1.8	1.6	1.2	1.0						
36	24			8.7	7.4	6.2	5.4	4.7	4.0	3.8	3.1	2.9	2.5	2.3	2.0	1.8				
38	26			9.3	8.0	6.9	6.0	5.0	4.6	4.0	3.5	3.1	2.8	2.5	2.2	1.8	1.5			

These tables provide allowable superimposed service loads (in plf) on the Inverted Tee Beam based on the following assumptions:

1- Prestressed Concrete: f'c=6000 psi

2- Service loads in the shaded boxes represent members with f'ci > 4000 psi and cambers over 2".

3- 50% of the allowable superimposed service load is considered dead load on the member

4- Loads are based on ACI 318-02